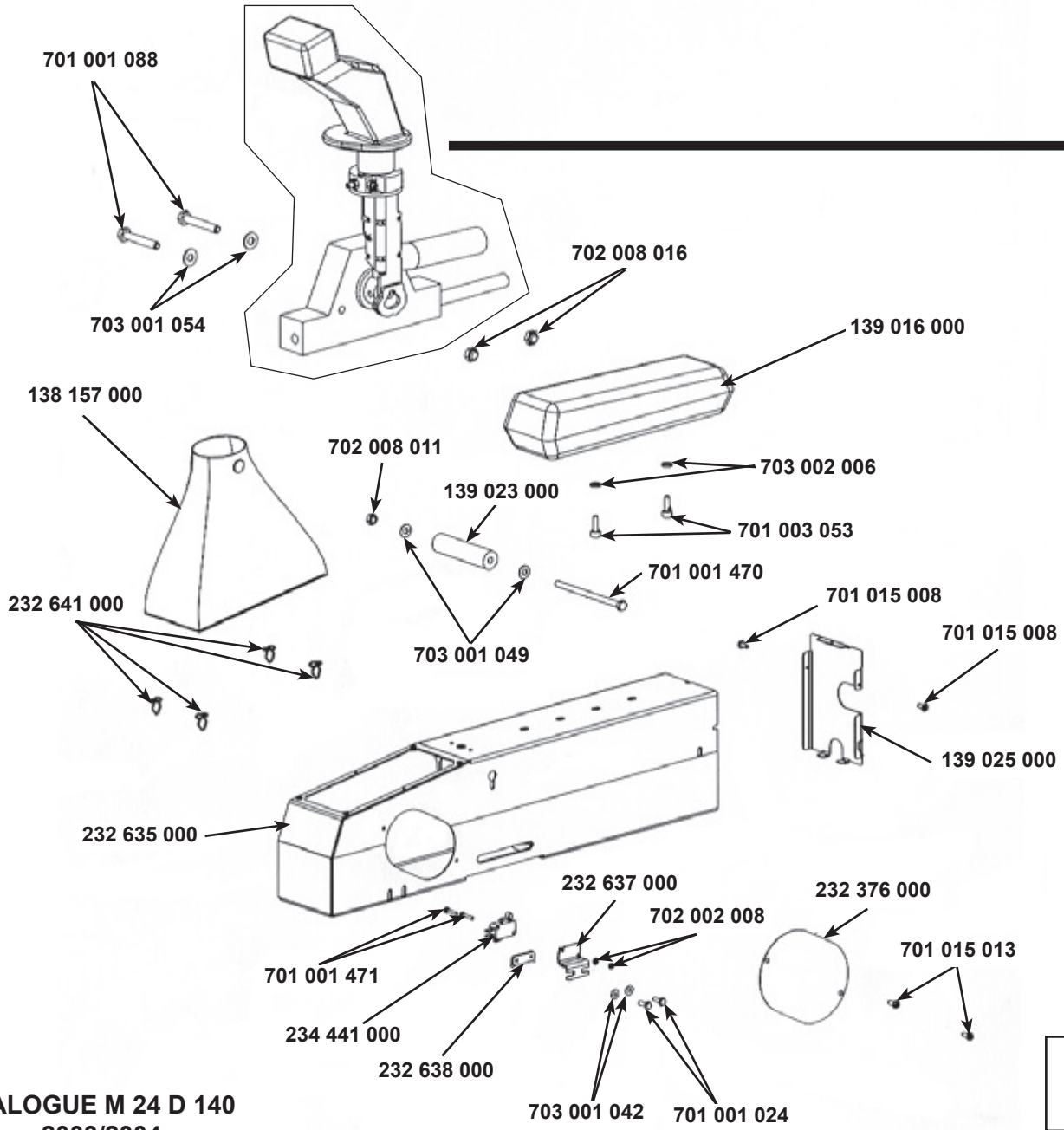

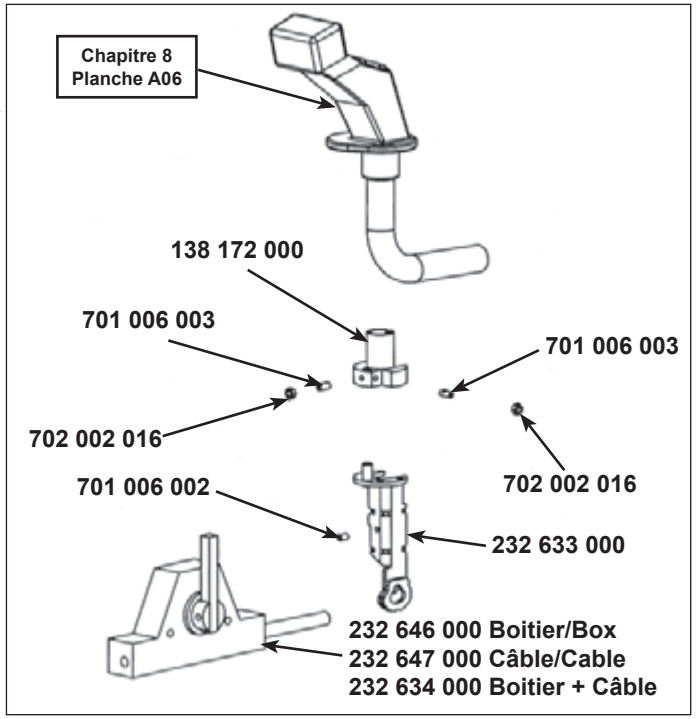

ACCOUDOIR COMPLET COMPLETE ARMREST	mathat	8 C01 21/09/04